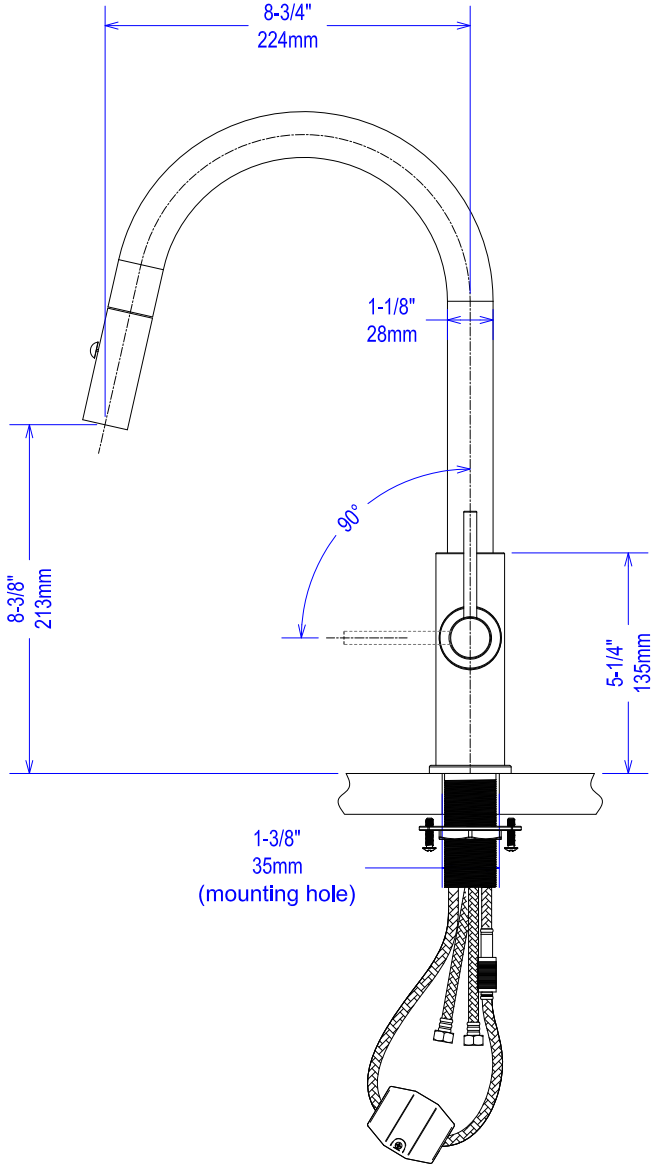

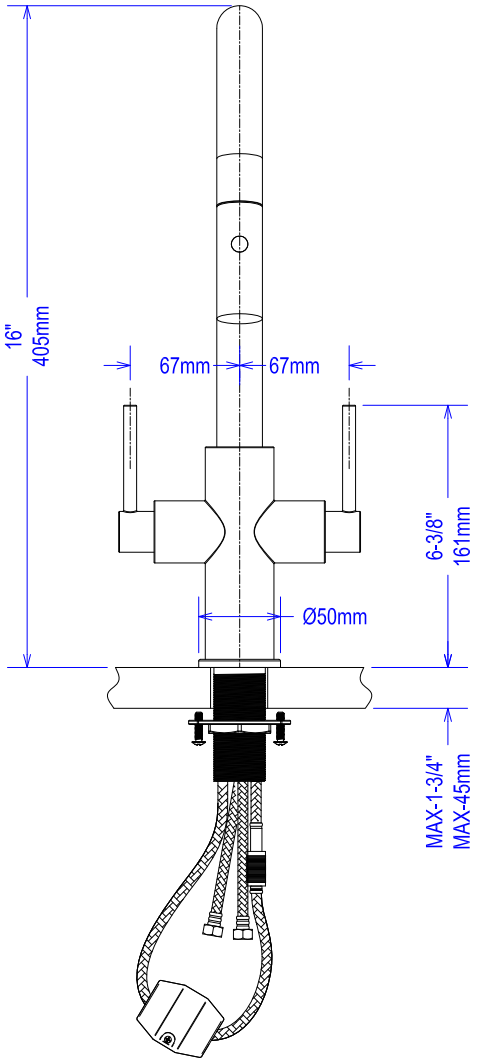

Remark:
1.all specification unit is (mm).
2.Exactly size subject to mark.

The drawing version:

Version	Details be revised	Date

MAXTOR
MAKE LIFE EASY

Project

Tavo 2 Handle Kitchen Faucet

Item code

KFB2021

Size

Dwg No.	REV
	01
Tolerance	±0.5
Scale	Date

Page:

Designed By: JM Chen

Checked By:
(Technical)

Approved By:

Angle of view: